JUMBO ISLAND GLASS SIDE

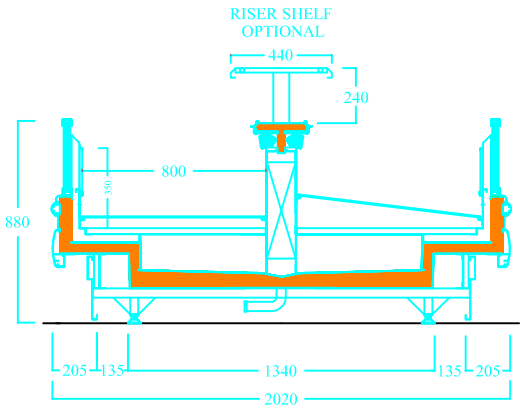

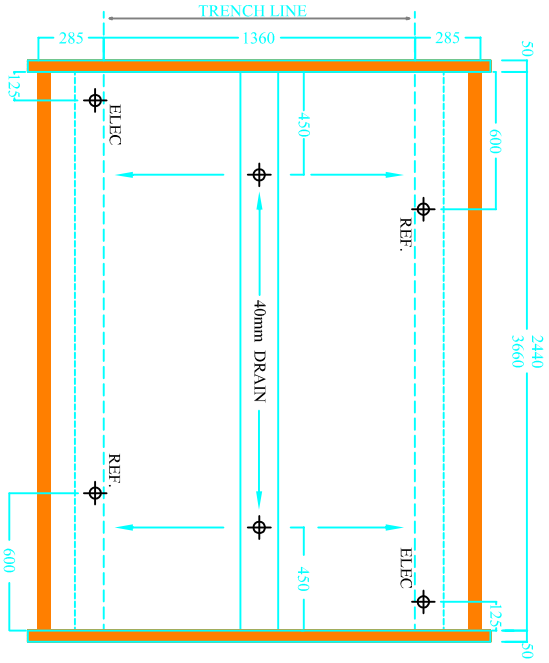

FROZEN FOOD SPECIFICATION — OPTIONAL

CABINET	DISPLAY	MODEL	TEMPERATURE	REF CAP	EVAP	DEFROST	ELECTRIC	ELECTRICAL REQUIREMENTS				RISER
LENGTH	SURFACE	JG	RANGE	WATTS	TEMP	TIME	DEFROST	WATTS	AMPS	VOLTS	REQ.CIRCUIT	LIGHTS
2440mm	3.90 m^2	JG 8	-18ºc TO -20ºc	1950	- 31º c	30 MIN	3000 WATTS	3642	16.6 - 3ph	380	10A	120w
3660mm	5.86 m^2	JG 12	-18ºc TO -20ºc	2800	- 31º c	30 MIN	4500 WATTS	5510	25.1 - 3ph	380	15A	260w

* ADD 50mm FOR EACH PATCH END

ICE CREAM SPECIFICATION — OPTIONAL

CABINET	DISPLAY	MODEL	TEMPERATURE	REF CAP	EVAP	DEFROST	ELECTRIC	ELECTRICAL REQUIREMENTS				RISER
LENGTH	SURFACE	JG	RANGE	WATTS	TEMP	TIME	DEFROST	WATTS	AMPS	VOLTS	REQ.CIRCUIT	LIGHTS
2440mm	3.90 m^2	JG 8	-22ºc TO -24ºc	2145	- 35º c	30 MIN	3000 WATTS	3642	16.6 - 3ph	380	10A	120w
3660mm	5.86 m^2	JG 12	-22ºc TO -24ºc	3080	- 35º c	30 MIN	4500 WATTS	5510	25.1 - 3ph	380	15A	260w

* ADD 50mm FOR EACH PATCH END

THE ABOVE SPECIFICATION IS BASED ON STANDARD
CONDITIONS OF 25ºC - 60% RH

CONCORD
REFRIGERATION (PTY) LTD

WE RESERVE THE RIGHT TO CONTINUALLY IMPROVE OUR PRODUCT , SPECIFICATIONS AND DESIGN . WE ARE ALSO NOT LIABLE
TO UPGRADE PREVIOUSLY SOLD EQUIPMENT TO NEW SPECIFICATIONS .

PHONE : (031) 4622323 FAX : (031) 4622383
E-MAIL ADDRESS : sales@concordrefrigeration.co.za
WEBSITE : www.concordrefrigeration.co.za